Typical power system/voltage regulator structures

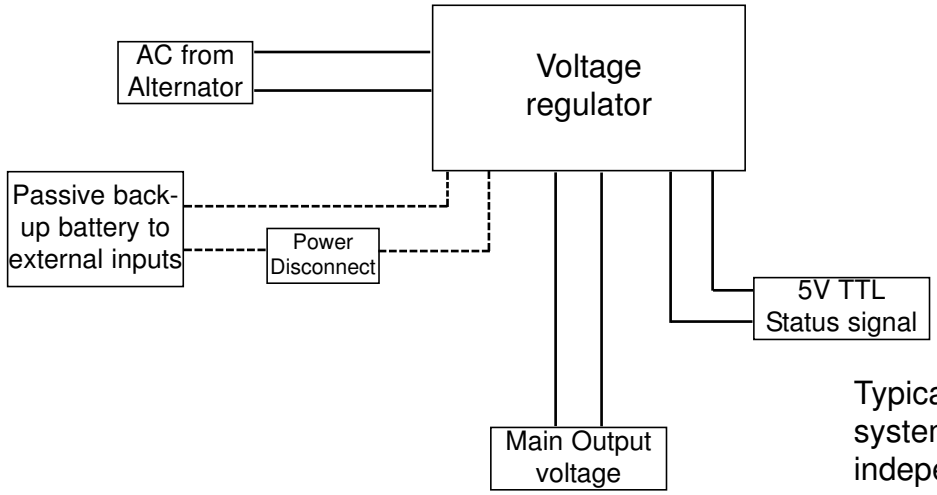

Typical basic single voltage system. Each load should be independently fused.

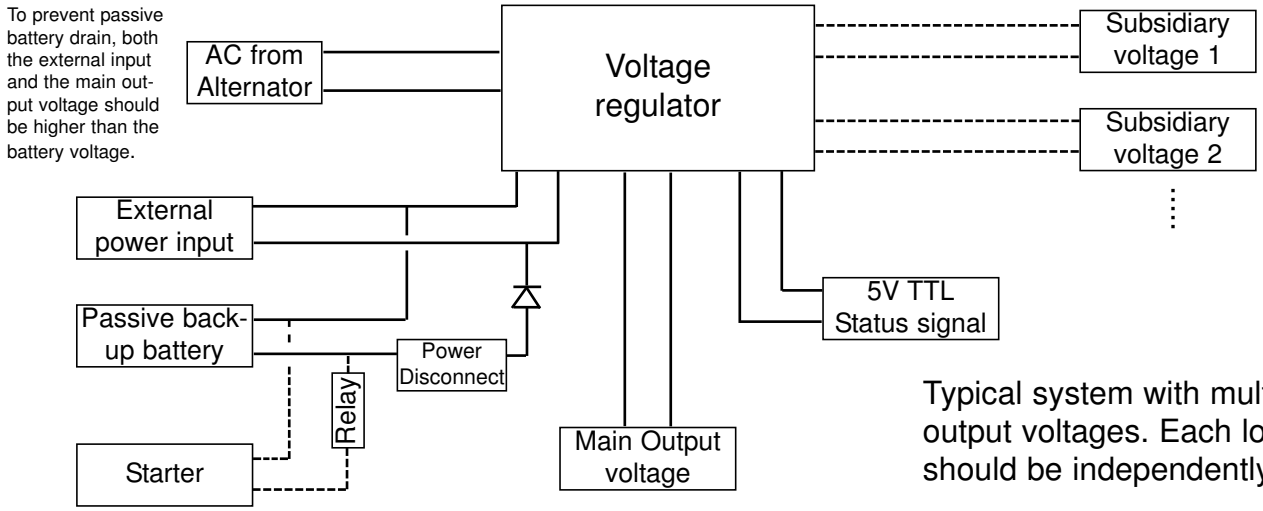

Typical system with multiple output voltages. Each load should be independently fused.

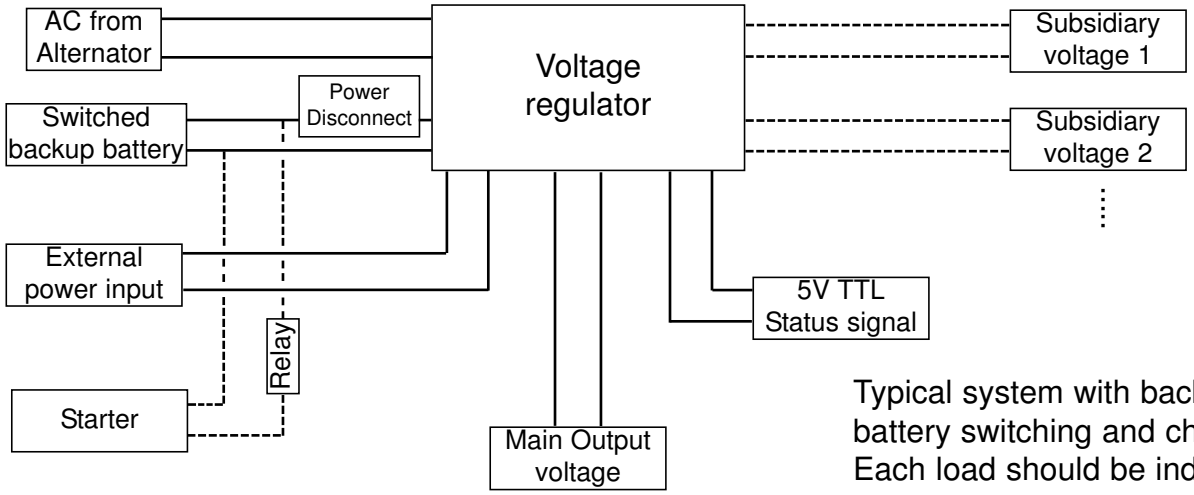

Typical system with backup battery switching and charging. Each load should be independently fused.

 © 2007